T

V

W

MEC 2000/P
MEC 3000/P
MEC 4000/P

Owner's Record

Date of Purchase: _____

Purchased from: _____

Model: _____

Serial Number: _____

0311

Index

Contents

Table of Contents continues on next page.

www.natvac.com | 800.253.5500

Parts List - MEC /P Series Pumps

Parts List - MEC /540 Series Pumps

Parts List - MEC Mixer Valve Manifold

Parts Details - Lubrication Systems

Index

Detail

Gear-Type Lubrication System

MEC 2000/P • MEC 3000/P • MEC 4000/P

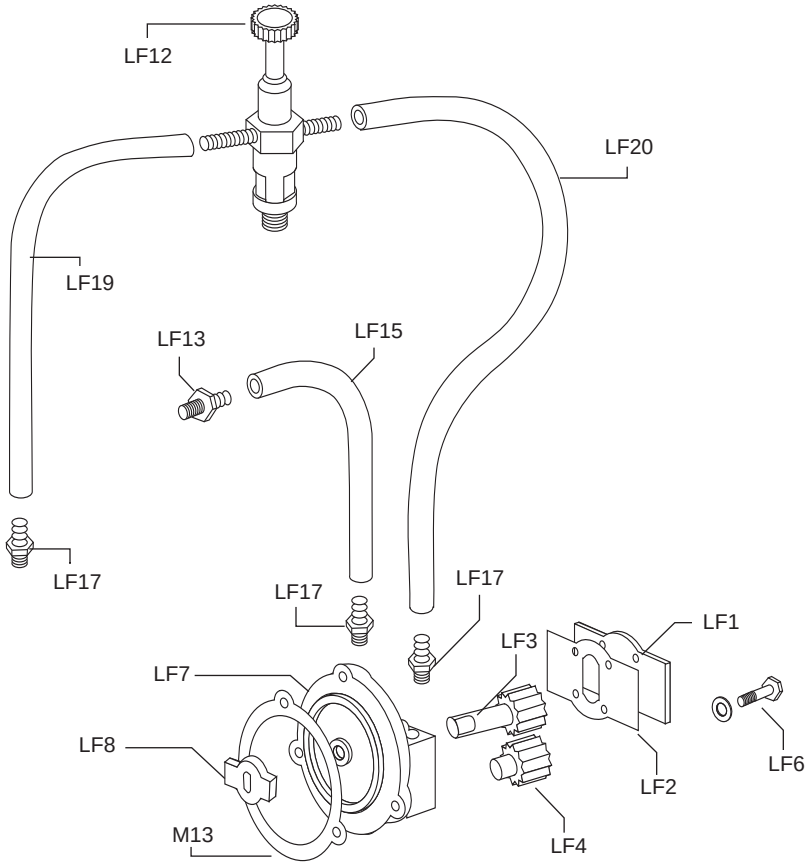

Gear-Type Lubrication System

MEC 2000/P
MEC 3000/P
MEC 4000/P

See Parts Diagram opposite.

Part #	Description
LF1	Cover Plate
LF2	Cover Plate Gasket
LF3	Drive Gear
LF4	Driven Gear
LF6	Bolt
LF7	Oil Pump Housing
LF8	Drive Tab
LF12	Dripper – T-Type (Clockwise)
LF12CCW	Dripper – V-Type (Counterclockwise)
LF12G	Dripper Gasket
LF12GL	Dripper Glass
LF13	Fitting (Housing Oil Reservoir - M10 x 1)
LF15	Hose (5mm x 10.5 mm x 6.75”)
LF17	Fitting (Gear Type Oil Pump - M6 x 1)
LF19	Hose (5mm x 10.5 mm x 8.5”)
LF20	Hose (5mm x 10.5 mm x 18.5”)
LF21	Oil Line Per Foot
LF22	Oil Pump – Complete
M13	Gasket

Introduction

General Information

About National Vacuum Equipment, Inc.

Congratulations! You now own a quality vacuum/pressure pump exclusively distributed in North America by National Vacuum Equipment, Inc. You have not only acquired a superior piece of equipment from a qualified dealer, you have hired a team of vacuum experts. We stand ready to work with your dealer to answer your questions and provide you with the information necessary to keep your equipment in peak working condition.

Thank you for using National Vacuum Equipment.

OUR MISSION:

We are dedicated to the manufacture and wholesale distribution of quality vacuum system products at a reasonable price, on a timely basis. We are a “one-stop shop” for manufacturers and distributors of vacuum equipment.

OUR HISTORY:

National Vacuum Equipment, Inc. was founded in 1980 by Bruce Luoma. The Company started as a retailer of vacuum pumps. Soon after it started, the Company secured the rights to exclusive distribution of the Battioni vacuum pumps in North America. This helped the Company to evolve into its current status as a wholesale supplier.

To reach the goal of becoming a full service supplier of vacuum system components, the Company began fabricating its own line of componentry, purchased and developed its own line of vacuum pumps, and began purchasing for resale various valves and accessories.

Today, NVE has full service machine and fabrication shops complete with CNC-controlled production equipment designed for close tolerance work. The company has a highly trained staff all of whom are dedicated to quality.

Detail

Automatic Oil Pump

One Outlet Type

Part # LW32CD Clockwise – One Outlet
Part # LW32CS Counterclockwise – One Outlet

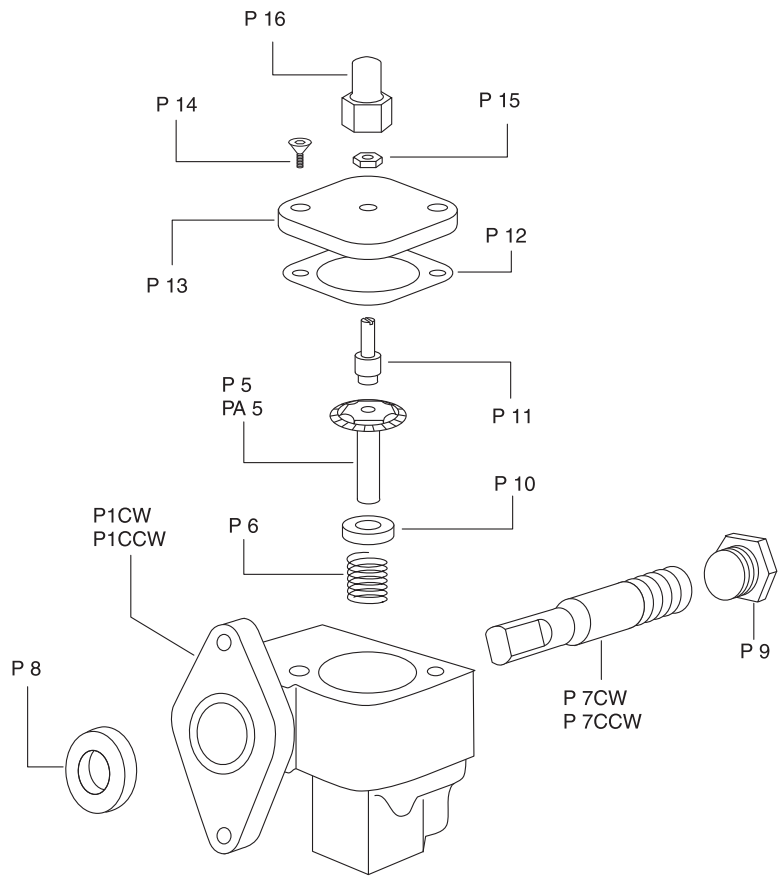

Automatic Oil Pump

See Parts Diagram opposite.

Part #	Description
P 1CW	Pump Body – 1 outlet (Clockwise)
P 1CCW	Pump Body – 1 outlet (Counterclockwise)
P 5	Driven Gear (Clockwise)
PA 5	Driven Gear (Counterclockwise)
P 6	Spring
P 7CW	Driving Gear (Clockwise)
P 7CCW	Driving Gear (Counterclockwise)
P 8	Seal
P 9	Plug
P 10	Retainer
P 11	Adjusting Screw
P 12	Gasket
P 13	Lid
P 14	Screw
P 15	Jam Nut
P 16	Cap

Limited Warranty

National Vacuum Equipment, Inc.

Guarantees that the product it provides is free of manufacturer's defects, including materials and workmanship. Properly installed and maintained product is warranted for a period of one (1) year subject to the following conditions:

1. A properly completed warranty registration card must be received by us within 30 days of sale to end user for pump sales to be considered warrantable. All pumps received for warranty consideration must retain the original NVE serial number tag.

2. The one (1) year period shall begin the day the product is shipped from our warehouse, unless we are provided with an authentic copy of the original resale invoice, in which case the one (1) year period shall begin at such invoice date.

3. The covered product must be used in an application for which it was intended. We do not recommend our product for particular uses or applications.

4. Vane breakage, or damage caused by vane breakage, is not warrantable.

5. Damage caused by improper use or lack of proper maintenance is not warrantable.

6. Manufacturer's liability under this or any other warranty, whether express or implied, is limited to repair of or, at the manufacturer's option, replacement of parts which are shown to have been defective when shipped

7. Manufacturer's liability shall not be enforceable for any product until National Vacuum Equipment, Inc. has been paid in full for such product.

8. Except to the extent expressly stated herein, manufacturer's liability for incidental and consequential damage is hereby excluded to the full extent permitted by law.

9. Manufacturer's liability as stated herin cannot be altered except in writing signed by an officer of National Vacuum Equipment, Inc.

10. Certain products provided by National Vacuum Equipment, Inc. are covered by their respective manufacturer's warranties (e.g., engines used in the NVE engine drive packages). These products are not covered by the National Vacuum Equipment, Inc. Manufacturer's Warranty.

11. Final assemblers responsibility. NVE goes to great lengths to insure the quality and proper functionality of the products it supplies. Many products we supply are purchased for resale or are impossible or impractical to test prior to the installation of the item in a vacuum system. It is therefore the responsibility of the final assembler to thoroughly test the vacuum system and components supplied to the assembler by NVE prior to the delivery of the final product to the end user.

12. Not responsible for pump coupling tightness or alignment. Customer needs to inspect periodically to ensure proper alignment and to check tightness of set screws.

Any items found to be defective after delivery to the end user that should have been discovered prior to deliver will qualify replacement of the defective part only with absolutely no compensation for outside labor or travel expenses. Any subsequent damage to other components caused by the defective part will be the sole responsibility of the assembler.

Detail

Automatic Lubrication System

MEC 2000 - 3000 - 4000

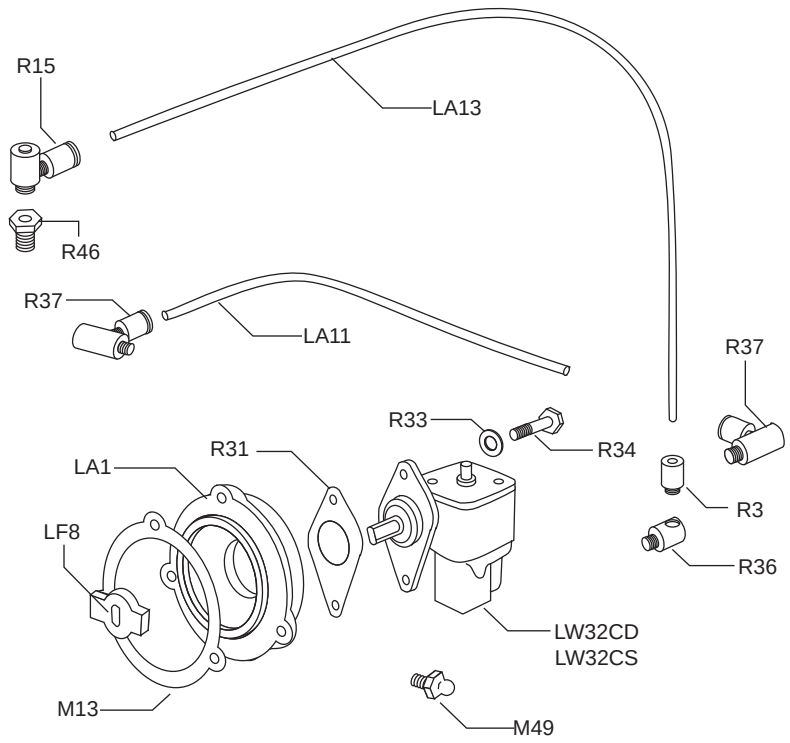

Automatic Lubrication System

MEC 2000
MEC 3000
MEC 4000

See Parts Diagram opposite.

Part #	Description
LA1	Bearing Cover
LA11	Hose (4mm x 6mm x 9.5”)
LA13	Hose (2 mm x 4 mm x 18.5”)
LW32CD	Piston Lubricator - Single Outlet (Clockwise)
LW32CS	Piston Lubricator - Single Outlet (Counterclockwise)
LF8	Drive Tab
M13	Gasket
M49	Fitting
R3	Fitting
R15	Fitting
R31	Gasket
R33	Washer
R34	Bolt
R36	Fitting
R37	Fitting
R46	Fitting

Notes:

Notes:

MEC 2000 - 3000 - 4000 Mixer Valve Manifold

MEC 2000 – MEC 3000 – MEC 4000
Mixer Valve Manifold

Parts Diagram

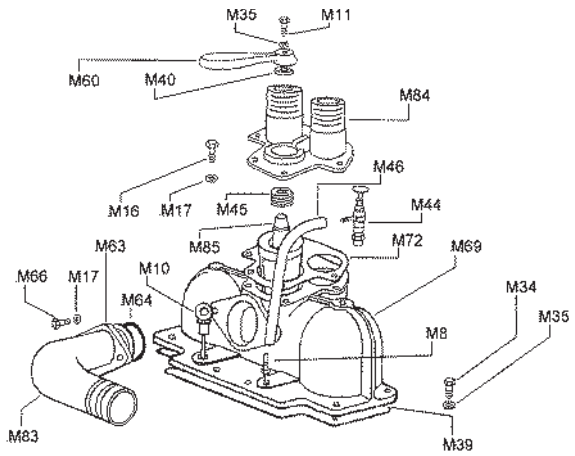

Part #	Description	Part #	Description
M8	Fitting	M46	Hose
M10	Dipstick	M60	Handle
M11	Bolt	M63	Flange
M16	Bolt	M64	O-ring
M17	Washer	M66	Bolt
M34	Bolt	M69	4-Way Valve Housing
M35	Washer	M72	Gasket
M39	Gasket	M83	2” Hose Connection
M40	Seal	M84	Mixer Valve Cover
M44	Dripper	M85	4-Way Valve Plug
M45	Spring		

MEC 2000/540 - 3000/540 - 4000/540

MEC 2000/540 – MEC 3000/540– MEC 4000/540

Parts Diagram

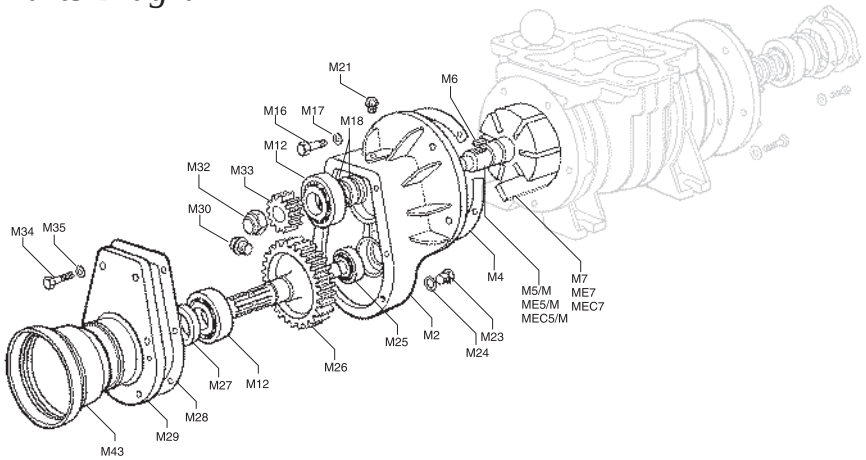

Part #	Description	Part #	Description
M2	Gear Casing	M23	Drain Plug
M4	Gasket	M24	Washer
M5/M	Rotor - 2000/540	M25	Bearing
ME5/M	Rotor - 3000/540	M26	Gear
MEC5/M	Rotor - 4000/540	M27	Seal
M6	Key	M28	Gasket
M7	Vane - 2000	M29	Gearbox Front Cover
ME7	Vane - 3000	M30	Plug
MEC7	Vane - 4000	M32	Locknut
M12	Bearing	M33	Gear
M16	Bolt (m10x30)	M34	Bolt (m8x25)
M17	Washer (10)	M35	Washer (8)
M18	Seal (40-52-7)	M43	PTO Guard
M21	Oil FIll Plug		

The MEC Series Pumps

Model-Specific Information for the
MEC 2000/P
MEC 3000/P
MEC 4000/P

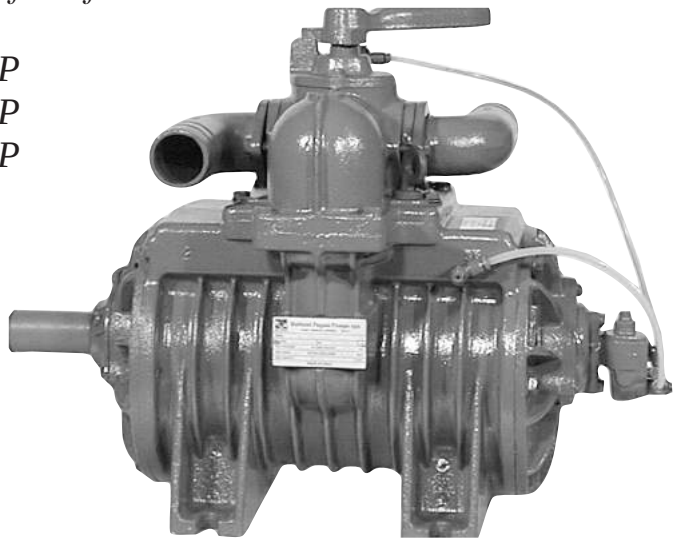

MEC Series Pump Specifications

Model Number	2000	3000	4000
RPM Range	800–1400	800–1400	800–1400
Max. Air Flow-CFM	90	120	145
Max. Continuous Vacuum	20	20	20
Max. Intermittent Vacuum	27	27	27
Max. Continuous Pressure	15	15	15
Max. Intermittent Pressure	30	30	30
Pump Drive Rotation	CW/CCW	CW/CCW	CW/CCW
Porting Size	2 inch	2 inch	2 inch
Manifold With Four Way Valve	Std	Std	Std
Oil Tank Capacity-Quarts	1	1 1/4	1 1/2
Bearings Sealed From Pump Interior	Std	Std	Std
Anti-Spin Check Valve	Std	Std	Std
Automatic Lubrication System	Opt	Opt	Opt
Net Weight	156	183	209

MEC 2000/P PERFORMANCE

		PRESSURE PSI							VACUUM – INCHES OF MERCURY								
RPM		30	25	20	15	10	5	0	3	4	4	4	5	5	5	6	42
1400	HP	12	11	9	8	6	4	3	4	87	86	84	80	77	71	64	5
	CFM	67	70	73	76	80	85	90	88	3	3	3	4	4	4	5	30
1200	HP	11	9	8	6	5	3	2	3	72	70	68	64	60	54	40	4
	CFM	54	57	61	66	68	72	75	74	2	2	3	3	3	4	4	20
1000	H.P	9	8	6	5	4	3	2	2	60	58	56	54	48	42	30	6
	CFM	41	44	48	51	55	58	63	62	9	12	15	18	21	24	27	6

MEC 3000/P PERFORMANCE

		PRESSURE PSI							VACUUM – INCHES OF MERCURY								
RPM		30	25	20	15	10	5	0	3	6	9	12	15	18	21	24	27
1400	HP	20	18	15	12	10	7	6	6	6	7	7	7	8	8	8	9
	CFM	97	100	103	107	111	116	120	118	116	114	112	110	105	100	90	72
1200	HP	15	13	12	10	8	6	5	5	5	5	6	6	6	6	7	7
	CFM	81	84	87	90	95	98	104	102	100	97	94	91	87	80	70	55
1000	H.P	12	11	10	8	7	5	4	4	4	5	5	5	5	5	6	6
	CFM	63	65	68	72	76	82	87	85	83	81	78	75	70	65	55	35

MEC 4000/P PERFORMANCE

		PRESSURE PSI							VACUUM – INCHES OF MERCURY								
RPM		30	25	20	15	10	5	0	3	6	9	12	15	18	21	24	10
1400	HP	23	20	18	15	12	9	6	7	7	8	8	8	9	9	9	90
	CFM	118	122	125	130	133	138	145	143	140	138	134	131	128	120	110	8
1200	HP	19	17	15	12	10	7	5	5	6	6	6	6	7	7	8	75
	CFM	102	106	109	111	116	120	128	125	123	120	117	115	110	100	90	7
1000	H.P	15	14	12	10	8	6	4	4	4	4	5	5	6	6	6	45
	CFM	81	83	85	90	95	100	108	105	102	100	96	92	85	80	68	27

Recommended Setup for optimum performance

National Vacuum Equipment, Inc.

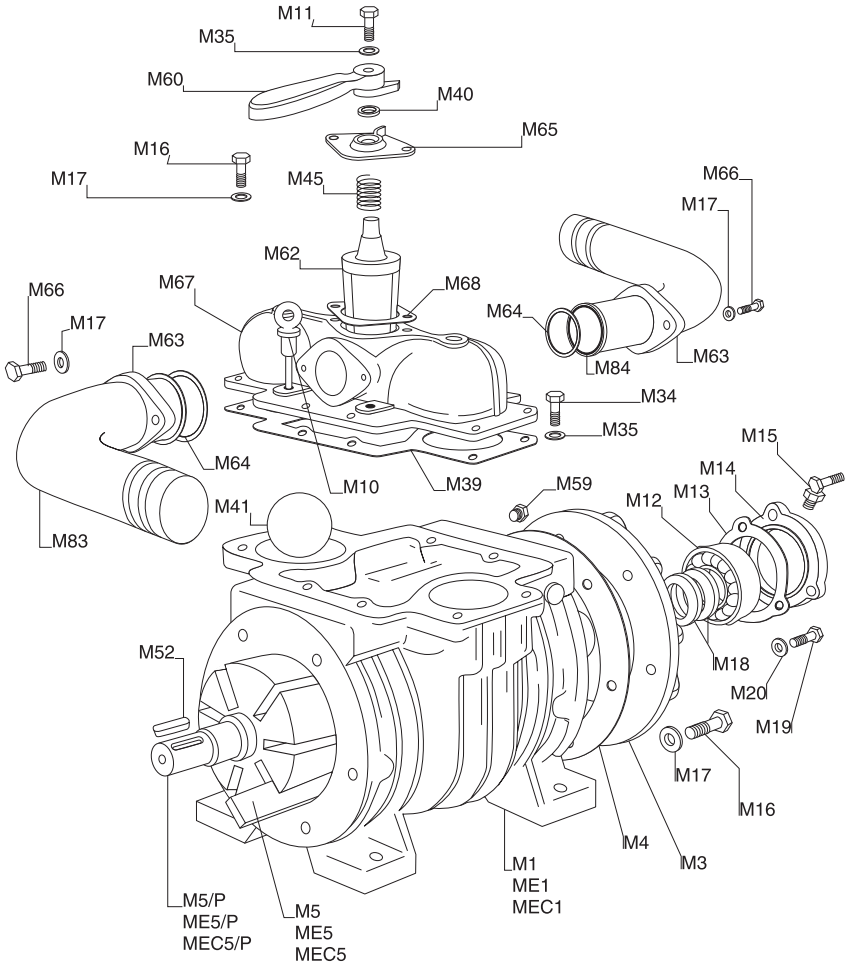

Parts Diagram

MEC 2000/P
MEC 3000/P
MEC 4000/P

Parts list continued from previous page.

Part #	Description	Part #	Description
M34	Bolt (m8x25)	M60	Handle
M35	Washer (8)	M62	4-way Valve Plug
M36	Exhaust Pipe	M63	Flange
M39	Gasket	M64	O-Ring
M40	Seal (30-40-7)	M65	4-way Valve Cover
M41	Non-Return Ball	M66	Bolt (m10x40)
M45	Spring	M67	4-way Valve Housing
M48	Bearing Cover Plate	M68	4-way Valve Cover Gasket
M49	Fitting	M83	2” Hose Connection
M50	Washer		
M51	Bolt		
M52	Key		
M53	Seal (35-52-10)		

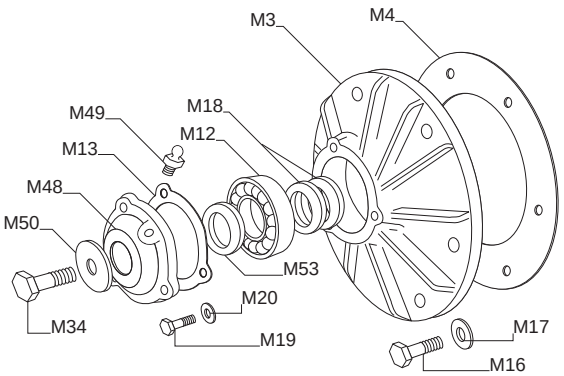

System requirements

High quality components

- The pump body and rotor are constructed of cast iron with free sliding vanes made of special nonmetallic, heat resistant material.
- Because vanes are nonmetallic, flammable fluids may be handled without danger.
- Vanes wear evenly because tips always remain in contact with the wall surface.
- For maximum life and proper performance we recommend the use of our compatible components, Portal F-801-2A, Moisture Trap F-901-2A, and Oil Catch Muffler F-1002-4A.

Parts List – MEC /P Series Pumps

MEC 2000/P
MEC 3000/P
MEC 4000/P

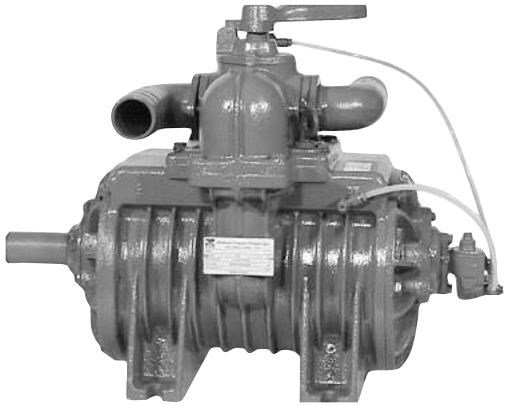

See Parts Diagram on the next page.

Part #	Description
M1	Housing - 2000
ME1	Housing - 3000
MEC1	Housing - 4000
M3	Rear Endplate
M3/P	Front Endplate
M4	Gasket
M5/P	Rotor - 2000/P
ME5/P	Rotor - 3000/P
MEC5/P	Rotor - 4000/P
M5	Vane - 2000
ME5	Vane - 3000
MEC5	Vane - 4000
AM10	Dipstick (mm .79)
AM11	Bolt (m8x20)
M12	Bearing
M13	Gasket
M16	Bolt (m10x30)
M17	Washer (10)
M18	Seal (40-52-7)
M20	Washer
M27	Gasket

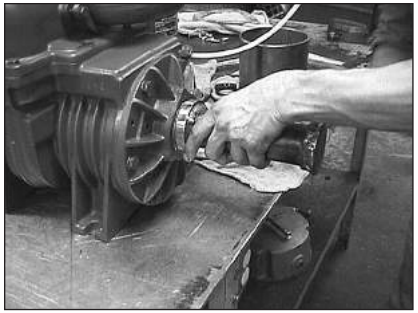

provided with an authentic copy of the original resale invoice, in which case the one (1) year period shall begin at such invoice date.

3. The covered product must be used in an application for which it was intended. We do not recommend our product for particular uses or applications.

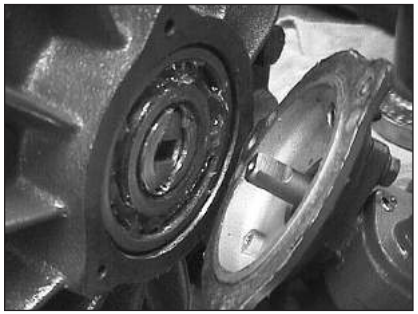

4. Vane breakage, or damage caused by vane breakage, is not warrantable.

5. Damage caused by improper use or lack of proper maintenance is not warrantable.

6. Manufacturer's liability under this or any other warranty, whether express or implied, is limited to repair of or, at the manufacturers option, replacement of parts which are shown to have been defective when shipped.

7. Manufacturer's liability shall not be enforceable for any product until National Vacuum Equipment, Inc. has been paid in full for such product.

8. Except to the extent expressly stated herein, manufacturer's liability for incidental and consequential damage is hereby excluded to the full extent permitted by law.

9. Manufacturer's liability as stated herein cannot be altered except in writing signed by an officer of National Vacuum Equipment, Inc.

10. Certain products provided by National Vacuum Equipment, Inc. are covered by their respective manufacturer's warranties (e.g., engines used in the

Operating Instructions

MEC 2000/P
MEC 3000/P
MEC 4000/P

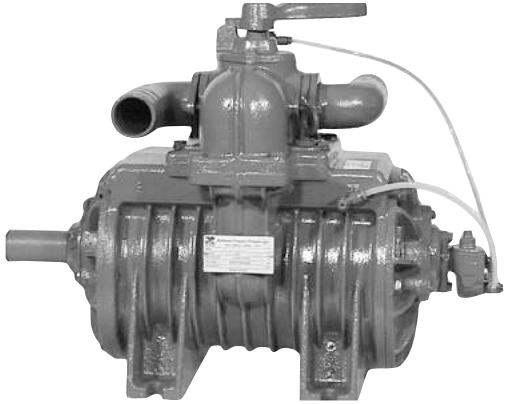

Installation

- Check pump rotation. See *Determining the Rotation of Pump*.
- Pump should always be mounted in a level, horizontal position on a firm, flat surface.
- Grade 5 bolts should be used in installation. It is important to use flat washers and lock washers.
- We recommend the use of oil resistant hose on both the inlet and outlet sides of the pump. If using direct drive system, always use a flexible coupling. We recommend the use of Woods Sure Flex Couplers.
- If a muffler is used on discharge side of pump, inlet and outlet of muffler must be at least equal to inside diameter of pump outlet.

Lubrication procedure for all vacuum pumps on start up

(This procedure must be followed prior to the operation of a new vacuum pump.):

- With force feed lubrication type, install dripper on top of pump and connect rubber lines.*
- Remove dipstick and fill oil reservoir with recommended turbine oil.
- With 540 RPM pumps: fill gear housing to level of clear plastic sight plug on the side of the housing with SAE 90 gear oil.
- Remove plastic cap on air inlet and pour 2 oz. turbine oil into pump. Start pump slowly and with valve in suction position, pour 2 oz. turbine oil into air inlet.
- At this point oil should be visible in the dripper or oil lines. Adjust dripper flow to 1 drop every 2 seconds.

  **Dripper will be shipped loose or taped to the bottom of the changeover valve handle.*

Automatic oil pump

- The automatic oil pumps are set at the factory during pump testing and should require no further adjustment during pump installation.
- The pumps are adjusted to one drop every two seconds per outlet. This oil rate equals 2.7 fluid oz. per hour.

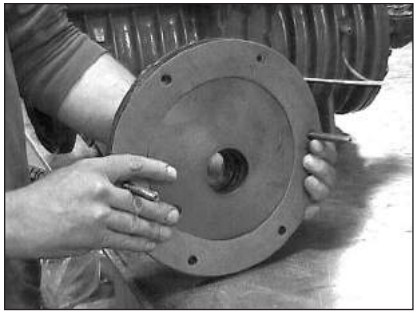

The pump is now ready to run.

24. Start the pump at a slow RPM and allow to run for a few minutes until oil can be seen in the lines or dripper.

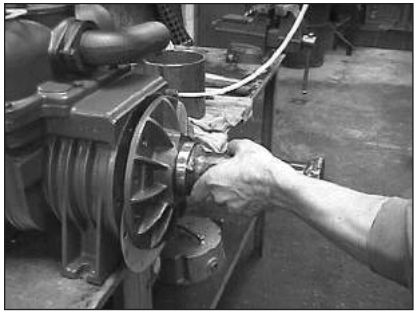

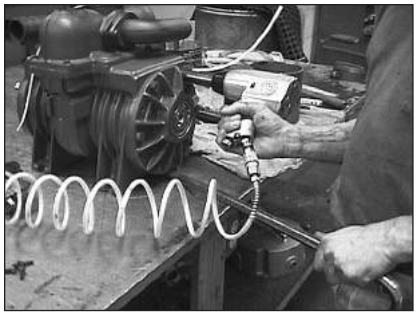

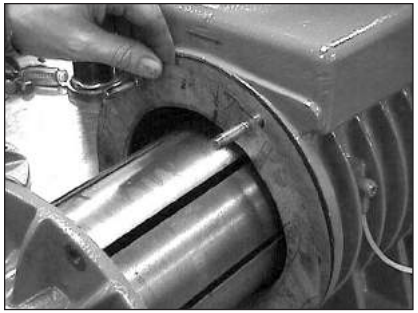

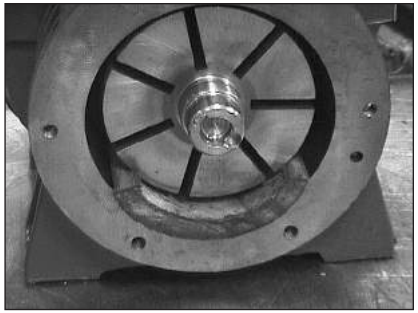

endplate bolts to 35-40 ft lb of torque.

Tighten both endplates in this manner.

20. Seat the bearings on both endplates with a bearing driver or punch.

21. At this point you should be able to turn the pump by hand.

22. Install the seal in the front bearing cover.

Lubricate the seal and seal surface on the rotor and install the front bearing cover.

Reinstall the oil pump drive key, oil pump mount assembly, and gaskets to the pump.

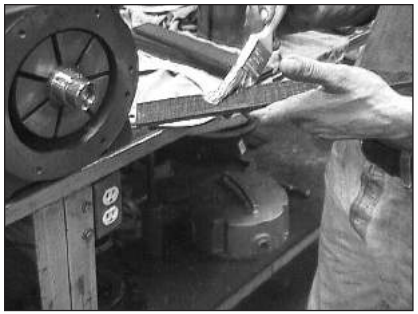

Be sure to line up the oil pump drive key and the oil pump shaft prior to tightening the assembly to the pump.

23. Connect the oil lines to the oil pump.

Adjusting the automatic oil pump

The automatic oil pump is a metered piston-type pump.

If you wish to adjust the pump, please follow these instructions:

Adjusting the oil rate

Oil flow is changed by adjusting the length of the stroke of the piston.

1. To adjust the oil rate, remove cap #P16. Under this cap you will find a jam nut #P15 and adjusting screw #P11.
2. To adjust oil rate loosen jam nut and turn adjusting screw clockwise to reduce oil flow or counterclockwise to increase oil flow.
3. When making adjustments do so one turn of the screw at a time and test before making further adjustments.
4. Be careful to not turn adjusting screw too far counterclockwise as you may disengage the gears and strip them out.

Testing flow rate after adjustment

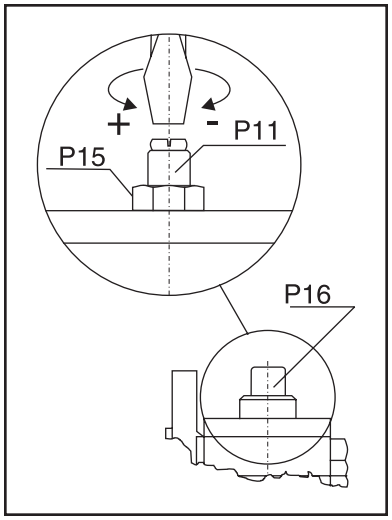

1. Observe oil drip rate in oil view meter or oil line to ensure adequate lubrication.
2. Adjustments should be done gradually so as not to starve the vacuum pump of oil.

Recommended lubrication

We recommend that turbine grade oil be used in all our pumps. Turbine oil is more highly refined than motor oil and is much less likely to create carbon. Turbine oil is available from your local oil distributor. Below is a list of acceptable oils.

Acceptable oils include:
1. *NVE ISO 68 Oil
2. Penzoil Penzabell 68 T.O.
3. Shell Turbo 68
4. Mobil D.T.E. Heavy - Medium
5. Texaco Regal R & O 68

* NVE ISO 68 Oil is our recommended pump oil for the Challenger series vacuum pumps. Challenger Vacuum Pump Oil is sold by the case, six 1 gallon containers of oil per case.

Normal operation for air cooled pumps:

1. Check oil reservoir daily and fill as required.
2. When pump is in operation check oiler to insure flow of oil to pump.
3. Do not operate pump faster than recommended RPM.
4. To operate suction valve on top of pump, move handle in the appropriate direction for either vacuum or pressure; center it for neutral.
5. We recommend checking vane wear every twelve months. A new vane is nearly flush with the rotor. Measure the wear and if is over 1/4” we recommend replacing vanes. It’s good to always keep a spare set of vanes on hand for emergencies.

Locate the two 10x50mm bolts used for pulling the endplate and insert them in bolt holes on either side of the endplate to capture the gaskets.

17. Lubricate seal sleeve and install the endplate on the end of the rotor and carefully drive the endplate on the rotor.

18. When the endplate is close enough to the housing install the endplate bolts lift the endplate-rotor assembly to allow

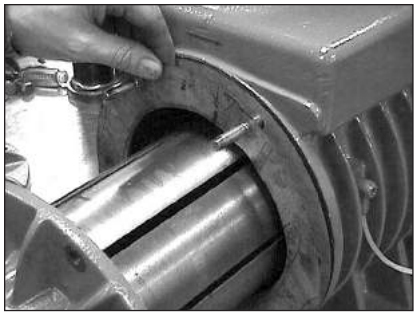

proper alignment of the bolts and bolt holes and start the bolts into the housing.

Just prior to making contact with the housing, lift the endplate-rotor assembly allow the endplate to enter the housing.

Tighten endplate bolts to the point where the endplate just touches the housing.

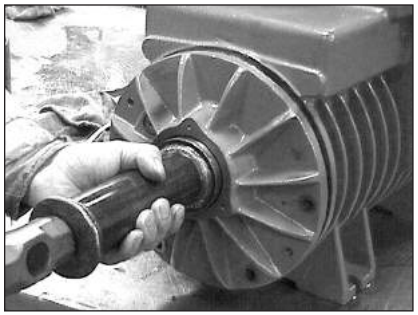

19. With a prybar and a block of wood, lift the endplate to make certain the seal gap is properly set and tighten the

9. Lubricate and install the bearings in the endplates.

10. Locate two pieces of threaded rod 3/8-18 thd. to use as guides and screw them into the two top holes in the housing.

Locate proper number of gaskets and slide on the threaded rods.

Do not use any gasket sealer.

11. Lubricate the housing bore.

12. Lubricate seal sleeve and drive the proper endplate on the input end of the rotor.

13. Slide rotor-endplate assembly into the pump housing.

    Slide the cushion material used during disassembly under the rotor on the opposite end to gain leverage during assembly of endplate to housing.

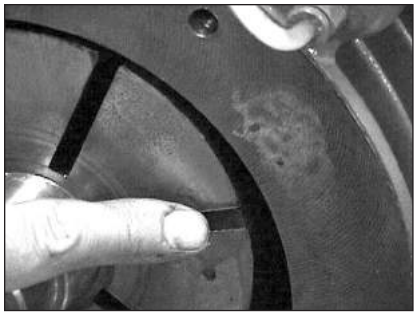

14. Lift the rotor-endplate assembly and slide over the 3/8 inch threaded guides and install the endplate bolts.

    Tighten the bolts sufficiently to make contact between the endplate and the housing.

15. Coat vanes with oil and install the vanes in the rotor. The vanes should slide freely in the vane slots.

16. Locate the proper number of gaskets and install them on the rear endplate.

Do not use any gasket sealer.

Maintenance

- With force feed type, the lubrication rate is adjustable at dripper and should be checked on a regular basis. Oil should be supplied to pump at a rate of 1 drop every 2 seconds.
- Average usage of oil is approximately 1-2 qts. per 40 hours, depending on operation.
- Oil should be changed every 2000 hours in gear per housing, if equipped.
- Front bearing should be greased approximately every 4 months. Use caution when greasing bearing not to over grease, as this can cause damage to seals.
- Normal vane life is approximately 2000 hours; however, this will vary greatly with temperature, material being pumped and proper maintenance.
- Occasionally liquid and dirt may enter the pump causing vanes to stick in the rotor slots along with excessive vane and housing wear. When this occurs you must clean the inside of the pump.

Cleaning the inside of the pump

- Remove air inlet hose or pressure relief valve.
- Run pump at an idle with the changeover valve in neutral.
- Pour 1 pint of diesel fuel into pump through the air inlet or fitting. Allow pump to run for 30 seconds then turn the change over valve to vacuum.
- Repeat two steps above several times, and then pour 2 oz. of oil into the pump and reassemble.
- Stop pump and turn slowly by hand while listening for vanes dropping. All vanes should move freely in the rotor slot.

- It is good practice to clean your pump on a regular basis as this will normally increase the life of your pump greatly.
- Vane wear should be checked every 12 months. A new vane will be flush with the outside diameter of the rotor.
- When vane wear exceeds 1/4” the vanes should be replaced. It is a good idea to have an extra set of vanes, seals and gaskets on hand at all times.

Determining the rotation of the pump

As one faces the drive end of the pump:

- For 1000 RPM pumps with the oiler on the right side, the pump shaft turns clockwise.
- For gear driven pumps (540 RPM) with the oiler on the right side, the pump shaft turns counterclockwise.
- If you must change the rotation of your pump contact the factory for instructions before attempting it.

only as much material as is necessary to give a smooth clean bore.

The maximum over bore we recommend is .060 inch. (A new housing has a bore of 6.300 inches.)

If you bore or hone the housing, remove the four way valve assembly and internal check valve ball prior to machining.

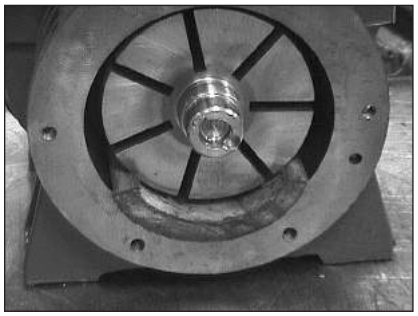

7. Inspect vanes, bearings and seals and replace as necessary.

A new vane is flush with the outside diameter of the rotor.

If they are worn more than 1/4” they should be replaced.

We recommend replacing vanes in sets.

If the ends of the vanes are chipped or delaminated they should be replaced.

The seals should be soft and pliable.

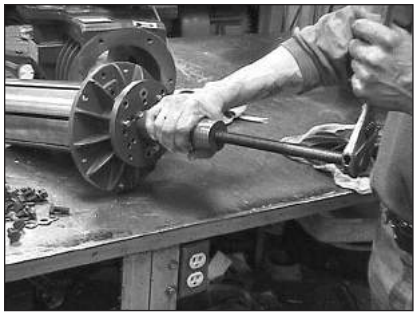

The bearing should turn smoothly.

8. Locate the replacement seals and install them in the endplates with the seals positioned back to back.

Replace the seal in the bearing cover with the lip facing outward.

3. Remove the six bolts attaching the endplate to the housing.

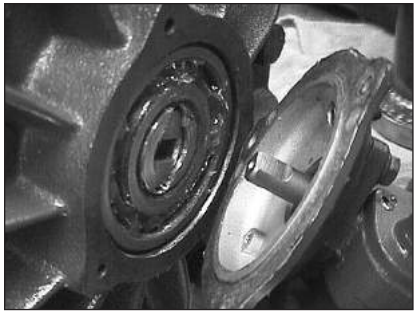

Support the rotor shaft prior to loosening the last bolt.

Slide the rotor out

4. Remove the front endplate, front bearing and bearing cover from the rotor with a puller or hydraulic press.

Put an identifying mark on the endplate so as to not confuse it with the rear.

5. Count the number of gaskets.

6. Clean the rotor, rotor slots and housing and inspect for wear or damage.

   If the housing needs to be bored or honed, remove

Troubleshooting

MEC 2000/P
MEC 3000/P
MEC 4000/P

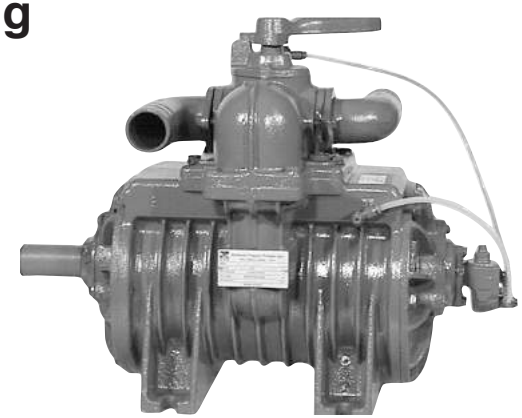

Pump overheats

- No oil in pump
- Oil adjustment set too lean
- Rpm too fast
- Prolonged operation

Too much oil use

- Oil adjustment set too rich
- Oil seals defective
- Cracked pump body

Pump doesn’t turn

- Broken vane
- Frozen
- Pump endplate bolts too tight
- Faulty PTO or drive set up

No vacuum or pressure in tank

- Suction valve in neutral
- Defective seal or vanes
- Pump not driven fast enough
- Check valve or suction line clogged
- Leak in tank or fittings

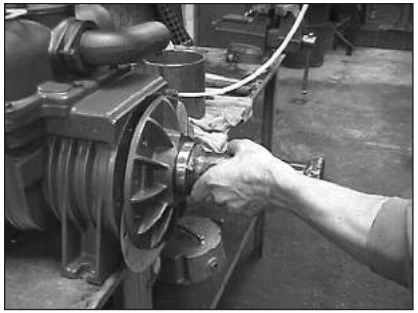

16. At this point you should be able to turn the pump by hand.

17. Reinstall the oil pump drive key and oil pump mount assembly to the pump.

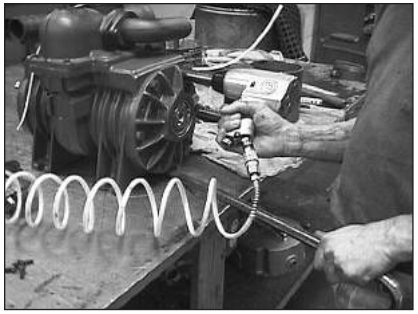

Be sure to line up the oil pump drive key and the oil pump shaft prior to tightening the assembly to the pump.

18. Connect the oil lines to the oil pump .

The pump is now ready to run.

19. Start the pump at a slow RPM and allow to run for a few minutes until oil can be seen in the lines.

The pump is now ready to go to work.

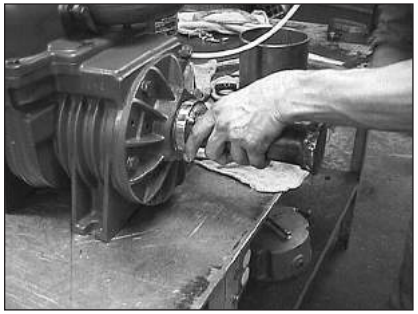

Complete rebuild

1. Follow steps 1-7 in the vane replacement instructions.

2. Place a cushion under the rotor to prevent damage when the front endplate is unbolted.

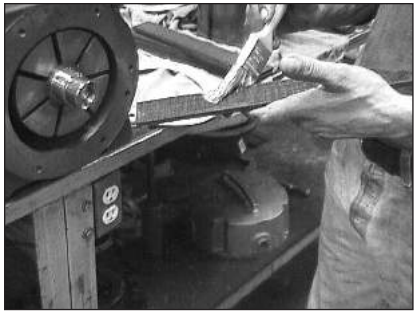

Locate the two 10x50mm bolts used for pulling the endplate and insert them in bolt holes on either side of the endplate to capture the gasket.

13. Lubricate seal sleeve and install the endplate on the end of the rotor and carefully drive the endplate on the rotor.

14. When the endplate is close enough to the housing install the endplate bolts lift the endplate-rotor assembly to allow proper alignment of the bolts and bolt holes and start the bolts into the housing.

Just prior to making contact with the housing, lift the endplate -rotor assembly again to insure proper clearance between the rotor and the housing.

Tighten endplate bolts to 35-40 ft lb of torque.

15. Seat the bearing with a bearing driver or punch.

Pump Rebuilding

MEC 2000/P
MEC 3000/P
MEC 4000/P

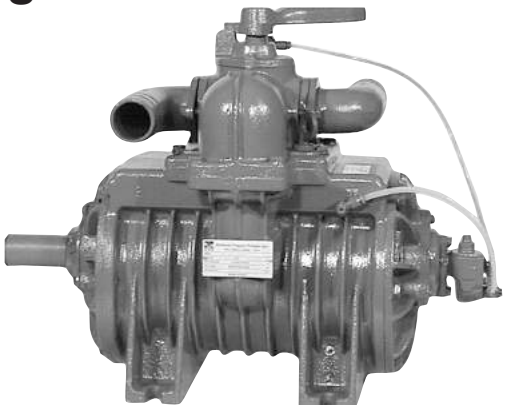

Please read these instructions completely before attempting repair.

Vane checking

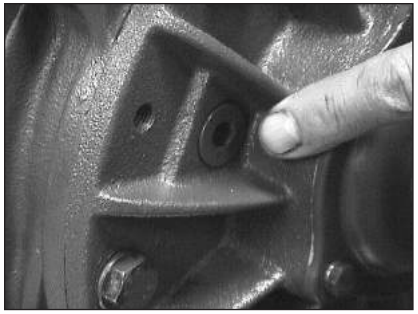

1. MEC pumps are equipped with a vane checking port.
2. Remove the Allen head plug in an endplate.
3. Measure the wear.
4. If the wear is more than 1/4” the vanes should be replaced.

Vane replacement

1. Clean off the exterior of the pump.

2. Remove the oil supply line at the oil pump and drain the oil tank.
3. Remove the 3 6x20mm screws attaching the oil pump assembly to the vacuum pump.
4. Remove the oil pump drive key from the end of the rotor.

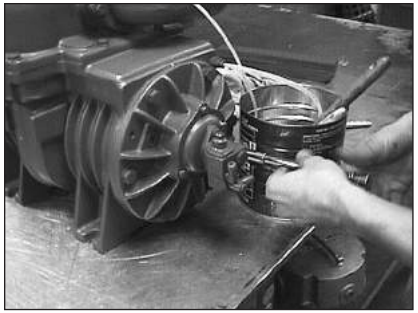

5. Remove the six bolts that attach the endplate to the pump.

Secure two 10x50mm bolts to screw into pull holes.

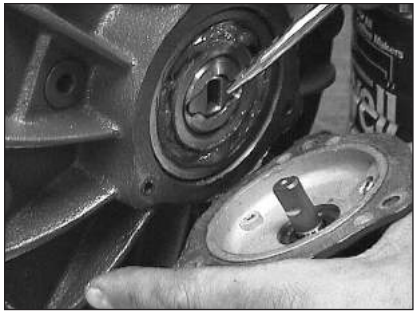

Screw the bolts into the pull holes evenly and pull off the endplate.

If you cannot locate 10x50mm bolts, you can use the endplate bolts and shim behind the endplate as the endplate comes off.

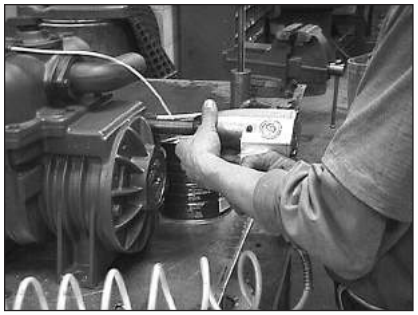

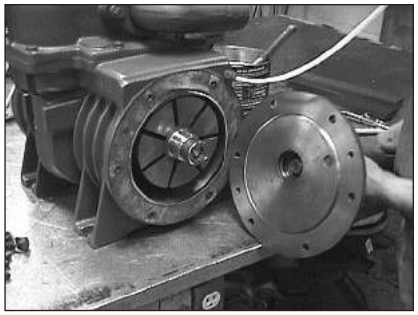

6. Note the number of gaskets on the endplate. You must use the same number of gaskets during reassembly.
7. Inspect vanes, bearings and seals and replace as necessary.

   A new vane is flush with the outside diameter of the rotor.

   If they are worn more than 1/4” they should be replaced.

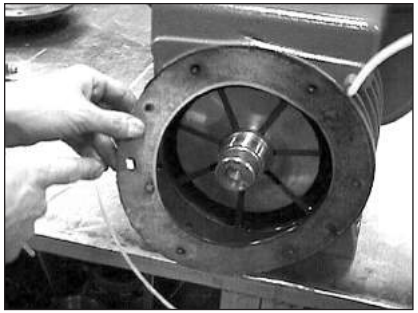

We recommend replacing vanes in sets.

If the ends of the vanes are chipped or delaminated they should be replaced.

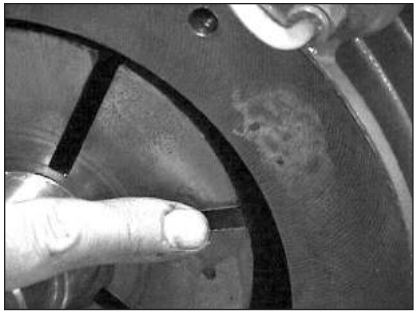

The seals should be soft and pliable.

The bearing should turn smoothly.

8. Clean the rotor, rotor slots and housing and inspect for wear or damage.
9. Coat the housing and vanes with oil and install the vanes in the rotor. The vanes should slide freely in the vane slot.
10. Locate the replacement seals and install them in the endplate with the seals positioned back to back.
11. Lubricate and install the bearing in the endplate.
12. Locate the proper number of gaskets and install them on the endplate.

Do not use any gasket sealer.